ALFRED TEVES BRAKE SYSTEMS (PTY) LTD

TECHNICAL BULLETIN

25 NOVEMBER 2025

136.0132

(ATE and Teves are registered trademarks of Continental Teves AG & Co oHG and/or its affiliates in Frankfurt Germany and other Countries)

NEW PART NUMBER

Drawing

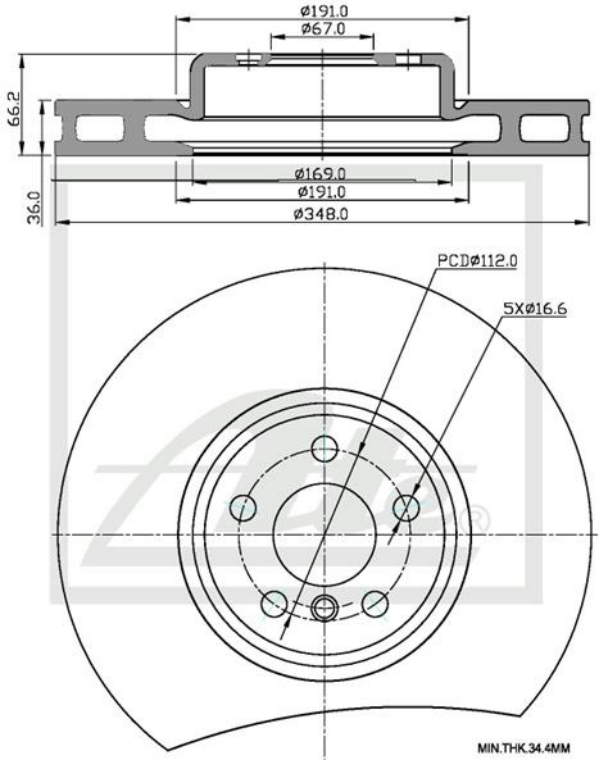

Details of New Part

Brake Disc – Front (right)

Product Dimensions
Diameter – 348mm
Thickness - 36mm
Height – 66.2mm
PCD – 112mm
Spigot – 67mm

Package Dimensions
Weight – 1500g
L – 398mm
W – 372mm
H – 79.3mm

Barcode

136.0132

Vehicle Applications

BMW 2 (G42) Coupe 2021-; BMW 3 (G20) 2018-; BMW 3 (G21) Touring 2018-; BMW 4 (G23) Convertible 2020-; BMW 4 (G22; G82) Coupe 2020-; BMW 4 (G22; G82) Coupe 2020-; BMW 5 (G30; F90) 2017-; BMW 5 (G31) Touring 2017-; BMW 6 (G32) Gran Turismo 2017-; BMW 7 (G11, G12) (2015-2022); BMW 8 (G16, F93) Gran Coupe 2018-; BMW X3 (G01, F97) 2017-; BMW X4 (G02, F98) 2018-; BMW X5 (G05, F95) 2018-; BMW X6 (G06, F96) 2019-; BMW X7 (G07) 2018-; BMW Z4 (G29) 2018-; BMW iX (I20) 2021-; TOYOTA SUPRA V (DB_) 2020-.

Position

Front Rear

CALL NOW TO ORDER YOUR STOCK!!!

(011) 898 1800

Picture(s) of the vehicle(s) that this part is suitable for

www.ate.co.za

"Single Minded about YOUR Safety"